ことひら システム
Kotohira System

A Series Network Cabinet

A Series 600 Width Network Cabinet Explosion Drawing

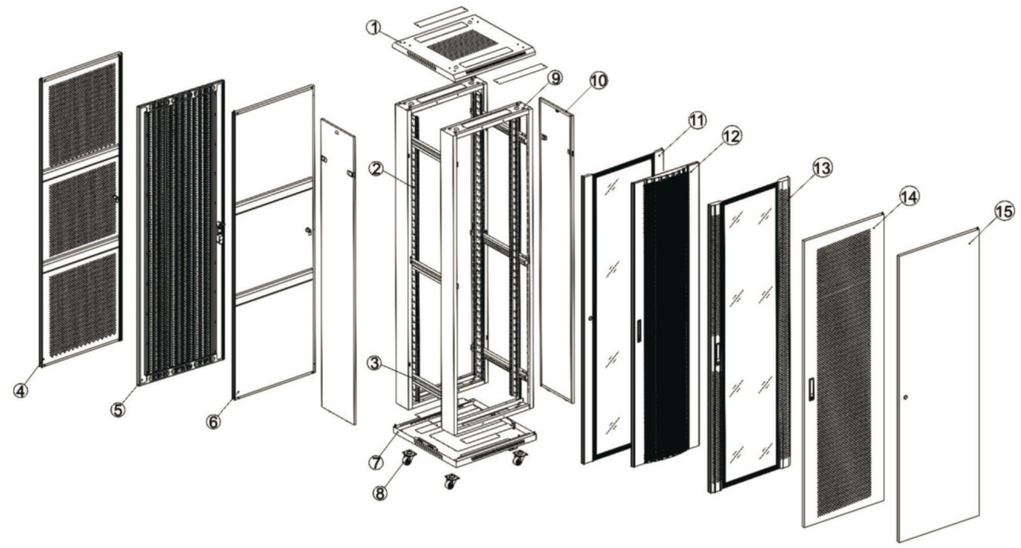

1. Top cover 2. Mouting profile 3. Mounting angle 4. Door with hexagonal holes 5. High-density vented door
6. Steel door without hole 7.Bottom panel 8.2" henvy duty castor 9.Frame 10.Side panel 11.A2 front door 12.AD front door
13.AS front door 14.A3 front door 15.A1 front door

Top cover with hexagon radiator hole

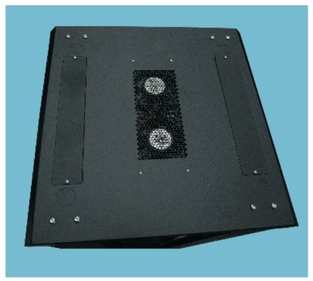
Fan units for top cover(optional)

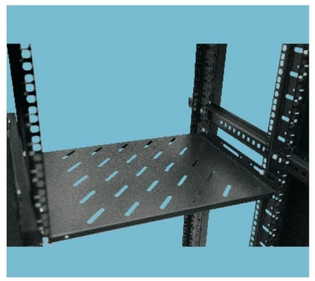
Fix shelf(optional)

Drawer

L rail with embossing

Keyboard with mouse panel

ことひら システム
Kotohira System

A Series 800 Width Network Cabinet Explosion Drawing

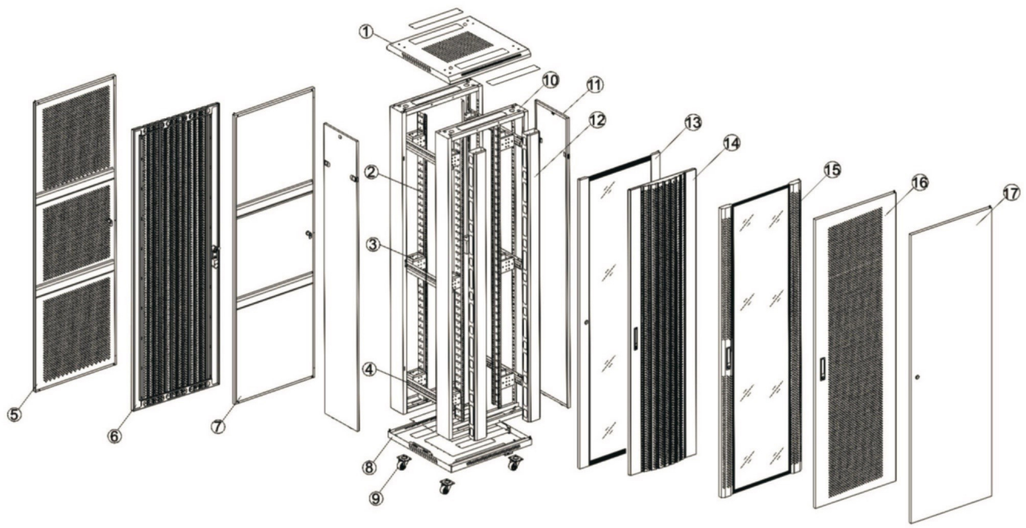

1. Top cover 2. Mouting profile 3. Spacer 4. Mounting angle
5. Door with hexagonal holes 6. High-density vented door
7. Steel door without hole 8. Bottom panel 9. 2" henvy duty castor
10. Frame 11. Side panel 12. Cable management slot
13. A2 front door 14. AD front door 15. AS front door
16. A3 front door 17. A1 front door

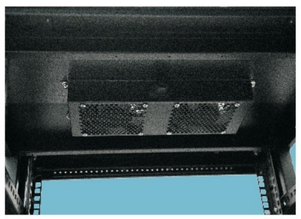

Top installation fan unit(Optional)

Metal cable management slot with cap

A Series 600 Width Cabinet Dimension Drawing

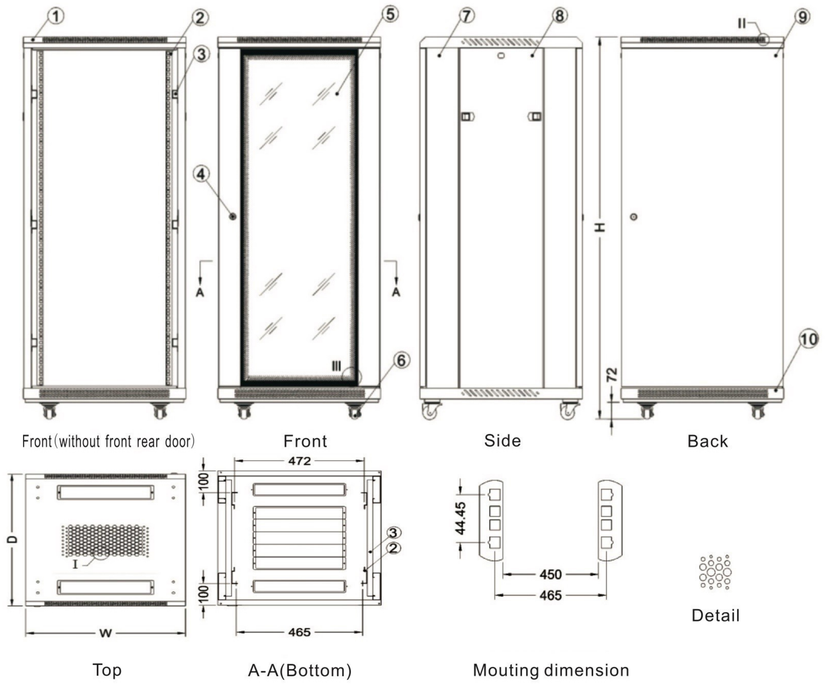

1. Top cover 2. Mounting profile 3. Mounting angle 4. Small round lock 5. Glass front door
6. Heavy duty castor 7. Frame 8. Side panel 9. Steel rear door 10. Bottom panel

Main parts:

S/N	Specification	Quantity	Unit	Material	Surface finish	Remark
1	Top cover	1	Piece	SPCC cold rolled steel t1.2	Powder coated	———
2	Mounting profile	4	Piece	SPCC cold rolled steel t2.0	Powder coated	———
3	Mounting angle	4/6	Piece	SPCC cold rolled steel t1.5	Powder coated	4pcs for lower 32U
4	Small round lock	2	Piece	———	———	With 4 keys
5	Front door	1	Piece	SPCC cold rolled steel t1.2	Powder coated	———
6	2" heavy duty castor	4	Piece	———	———	———
7	Frame	2	Piece	SPCC cold rolled steel t1.2	Powder coated	———
8	Side panel	2	Piece	SPCC cold rolled steel t1.2	Powder coated	Steel door
9	Rear door	1	Piece	SPCC cold rolled steel t1.2	Powder coated	———
10	Bottom panel	1	Piece	SPCC cold rolled steel t1.2	Powder coated	———
11	Inner 6-angle screws&nuts	20/40	Piece	———	———	———
12	Adjustable feet	4	Piece	———	———	———
13	Allen wrench	1	Piece	———	———	———

Colour of cabinet:

Colour Standard	Normal Colour		
Standard	RAL9004	RAL7035	Other color

ことひら システム
Kotohira System

800 Width Cabinet Dimension Drawing

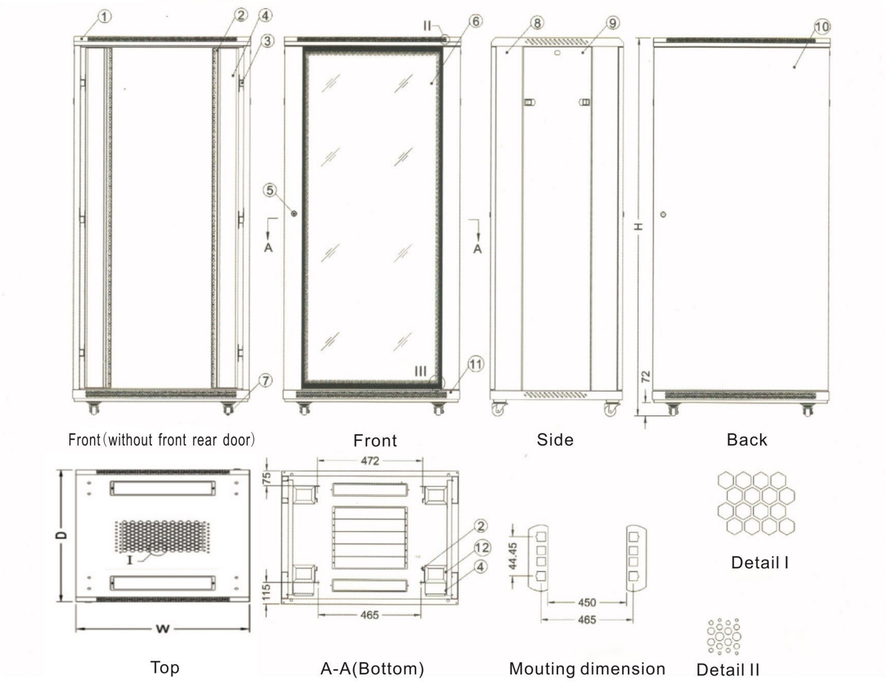

1. Top cover 2. Mounting profile 3. Mounting angle 4. Cable management slot 5. Small round lock 6. Glass front door
7. Heavy duty castor 8. Frame 9. Side panel 10. Steel rear door 11. Bottom panel 12. Spacer

Main parts:

S/N	Specification	Quantity	Unit	Material	Surface finish	Remark
1	Top cover	1	Piece	SPCC cold rolled steel t1.2	Powder coated	———
2	Mounting profile	4	Piece	SPCC cold rolled steel t2.0	Powder coated	———
3	Mounting angle	4/6	Piece	SPCC cold rolled steel t1.5	Powder coated	4pcs for lower 27U
4	Cable management slot	2	Piece	SPCC cold rolled steel t0.8	Powder coated	———
5	Small round lock	2	Piece	———	———	———
6	Front door	1	Piece	SPCC cold rolled steel t1.2	Powder coated	———
7	2" heavy duty castor	4	Piece	———	———	———
8	Frame	2	Piece	SPCC cold rolled steel t1.2	Powder coated	———
9	Side panel	2	Piece	SPCC cold rolled steel t1.2	Powder coated	Steel door
10	Rear door	1	Piece	SPCC cold rolled steel t1.2	Powder coated	———
11	Bottom panel	1	Piece	SPCC cold rolled steel t1.2	Powder coated	———
12	Spacer	8/12	Piece	SPCC cold rolled steel t1.5	Powder coated	8pcs for lower 27U
13	Inner 6-angle screws&nuts	20/40	Piece	———	———	———
14	Adjustable feet	4	Piece	———	———	———
15	Allen wrench	1	Piece	———	———	———

Colour of cabinet:

Colour Standard	Normal Colour		
Standard	RAL9004	RAL7035	Other color

Optional Front Door:

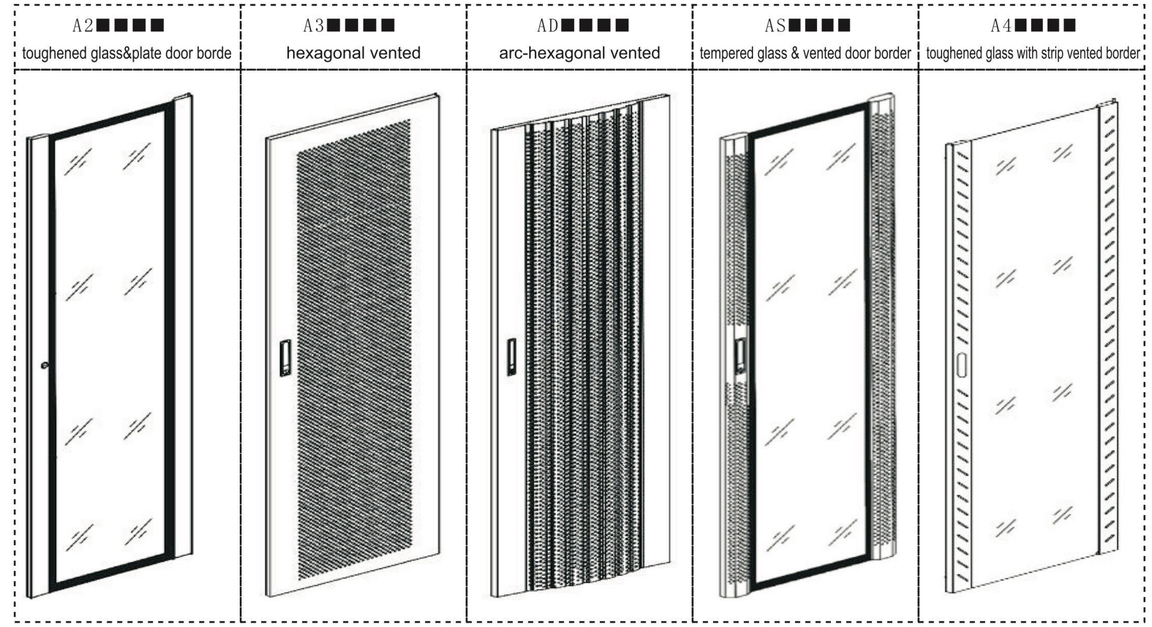

Optional Rear Door:

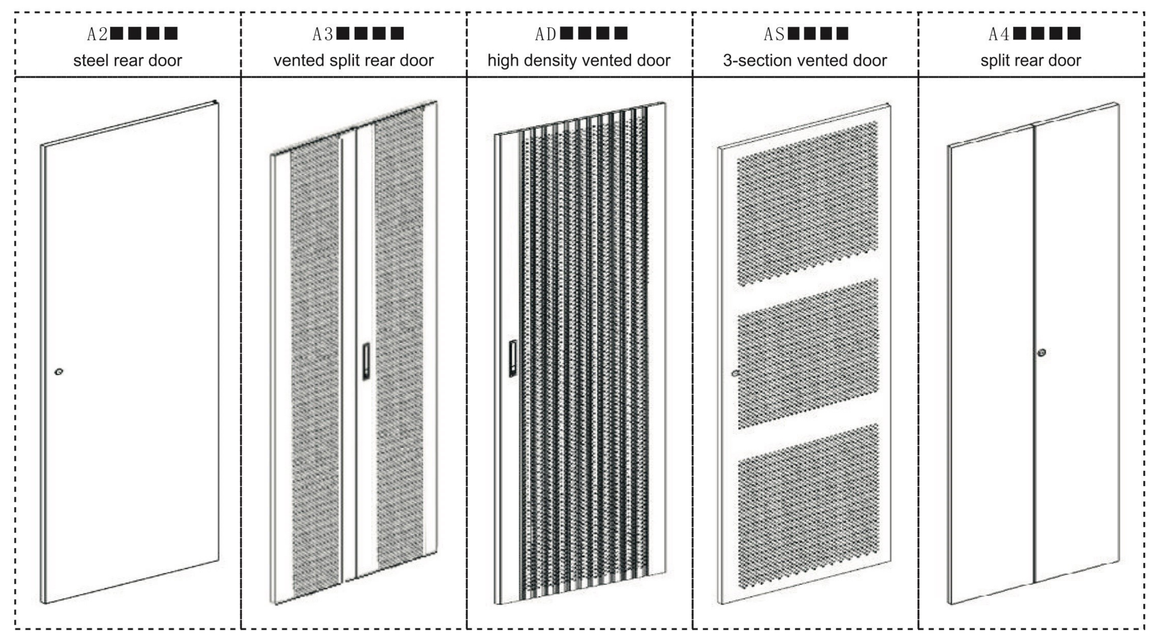

ことひら システム
Kotohira System

Packing Drawing

1、Assembing Draft:

flat pack, each cabinet with 2-3packages, 3package for above 1000mm, 2package for lower 1000mm

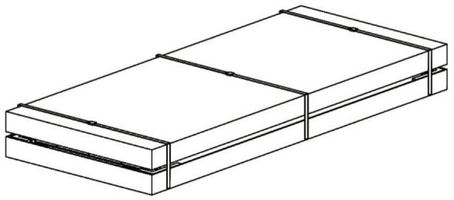

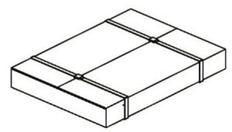

2、Installation instructions:

A、2 frames are prior assembled;

B、Use bolts to connect the 2frames 4pcs mounting profiles and mounting angle. The cabinet frame is ready;

C、Fix top and bottom frame and other accessories in the right position assembling;

D、Install front and back door, side door;

E、Complete assembly, test and adjusting.

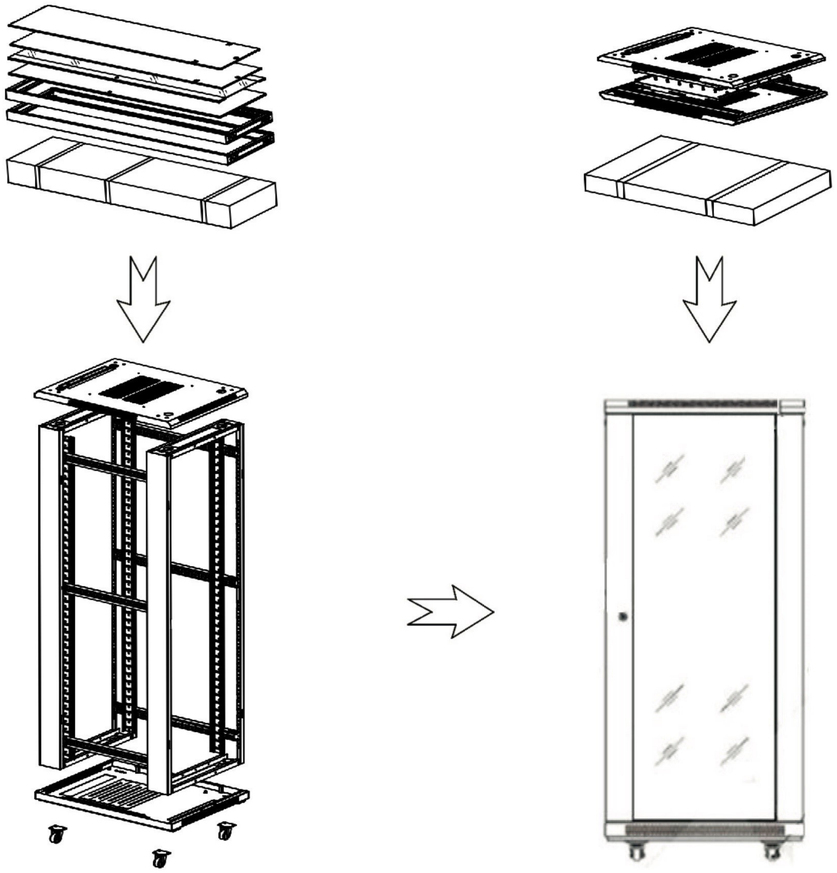

Standard A?-600 Width Specification (Including 72 mm Castor)

Model no.	Width(mm)	Depth(mm)	Height(mm)	Capacity(U)	Packing dimension	Volume (CBM)
A■-6618	600	600	988	18	640*640*998	0.41
A■-6818		800			640*840*998	0.53
A■-6622	600	600	1166	22	640*640*1176	0.48
A■-6822		800			640*840*1176	0.63
A■-6627	600	600	1388	27	640*640*1398	0.57
A■-6827		800			640*840*1398	0.75
A■-6632	600	600	1610	32	640*640*1620	0.66
A■-6832		800			640*840*1620	0.87
A■-6932		900			640*940*1620	0.97
A■-6A32		960			640*1000*1620	1. 04
A■-6032		1000			640*1040*1620	1.08
A■-6637	600	600	1833	37	640*640*1843	0.75
A■-6837		800			640*840*1843	0.99
A■-6937		900			640*940*1843	1.11
A■-6A37		960			640*1000*1843	1.18
A■-6037		1000			640*1040*1843	1.23
A■-6642	600	600	2055	42	640*640*2065	0.85
A■-6842		800			640*840*2065	1.11
A■-6942		900			640*940*2065	1.24
A■-6A42		960			640*1000*2065	1.32
A■-6042		1000			640*1040*2065	1.37
A■-6647	600	600	2277	47	640*640*2287	0.93
A■-6847		800			640*840*2287	1.22
A■-6947		900			640*940*2287	1.37
A■-6A47		960			640*1000*2287	1.46
A■-6047		1000			640*1040*2287	1.52

Standard A?-800 Width Specification (Including 72 mm Castor)

Model no.	Width(mm)	Depth(mm)	Height(mm)	Capacity(U)	Packing dimension	Volume (CBM)
A■-8622	800	600	1166	22	840*640*1176	0.63
A■-8822		800			840*840*1176	0.83
A■-8627	800	600	1388	27	840*640*1398	0.75
A■-8827		800			840*840*1398	0.99
A■-8632	800	600	1610	32	840*640*1620	0.87
A■-8832		800			840*840*1620	1. 14
A■-8932		900			840*940*1620	1. 28
A■-8A32		960			840*1000*1620	1.36
A■-8032		1000			840*1040*1620	1.42
A■-8637	800	600	1833	37	840*640*1843	0.99
A■-8837		800			840*840*1843	1. 30
A■-8937		900			840*940*1843	1.46
A■-8A37		960			840*1000*1843	1.55
A■-8037		1000			840*1040*1843	1.61
A■-8647	800	600	2055	42	840*640*2065	1. 11
A■-8847		800			840*840*2065	1.46
A■-8947		900			840*940*2065	1.63
A■-8A47		960			840*1000*2065	1. 73
A■-8047		1000			840*1040*2065	1.80
A■-8647	800	600	2277	47	840*640*2287	1. 23
A■-8847		800			840*840*2287	1.61
A■-8947		900			840*940*2287	1.81
A■-8A47		960			840*1000*2287	1.92
A■-8047		1000			840*1040*2287	2.00

ことひら システム
Kotohira System

A1 Network Cabinet

Standard:

Comply with ANS/EIA、 RS-310-D、 IEC297-2、 DIN41491、PART1、DIN41494、PART7、GB/T3047.2-92 ETSI standard;

Feature:

★Steel front and rear door with round lock;

★ 19"standard installation, achieve the international standard for the installation of the versatility of the parts, door interchangeability;

★ Assembled frame structure, assembled and disassembled shippment,Maximize save shipping costs;

★Removable side panels,easy to install and maintain;

★ Various optional accessories, convenient and fast installation,efficient cabinet baying kit;

★Adjustable feet and heavy duty castors are available at the same time,convenient to move or fix;

★Several lockable cable entry on top cover and bottom panel.Front rear door and side panel easy to install and remove ,Bottom ventilation and rat proof.

Loading capacity:

Static loading:800KG ;

Degree of protection:

IP20;

Surface finish:

Degreasing,phosphoric,silane,powder coated;

Optional:

Fixed shelf,fan unit,pdu,cable management, keyboard tray,blank panel;

A2 Network Cabinet

Standard:

Comply with ANS/EIA、 RS-310-D、 IEC297-2、 DIN41491、PART1、DIN41494、PART7、GB/T3047.2-92 ETSI standard;

Feature:

★ Toughened glass front door with round lock,steel rear door with round lock;

★ 19"standard installation, achieve the international standard for the installation of the versatility of the parts, door interchangeability;

★ Assembled frame structure, assembled and disassembled shippment,Maximize save shipping costs;

★Removable side panels,easy to install and maintain;

★ Various optional accessories, convenient and fast installation,efficient cabinet baying kit;

★Adjustable feet and heavy duty castors are available at the same time,convenient to move or fix;

★Several lockable cable entry on top cover and bottom panel.Front rear door and side panel easy to install and remove ,Bottom ventilation and rat proof.

Loading capacity:

Static loading:800KG ;

Degree of protection:

IP20;

Surface finish:

Degreasing,phosphoric,silane,powder coated ;

Optional:

Fixed shelf,fan unit,pdu,cable management, keyboard tray,blank panel;

ことひら システム
Kotohira System

A3 Network Cabinet

Standard:

Comply with ANS/EIA、 RS-310-D、 IEC297-2、 DIN41491、PART1、DIN41494、PART7、GB/T3047.2-92 ETSI standard;

Feature:

★Hexagonal reticular high-density vented plate front door and rear door with round lock;

★ 19"standard installation, achieve the international standard for the installation of the versatility of the parts, door interchangeability;

★ Assembled frame structure, assembled and disassembled shippment,Maximize save shipping costs;

★Removable side panels,easy to install and maintain;

★ Various optional accessories, convenient and fast installation,efficient cabinet baying kit;

★Adjustable feet and heavy duty castors are available at the same time,convenient to move or fix;

★Vetilation rate is 71%,can meet the requirements of heat dissipation;

Several lockable cable entry on top cover and bottom panel.Front rear door and side panel easy to install and remove ,Bottom ventilation and rat proof.

Loading capacity:

Static loading:800KG ;

Degree of protection:

IP20;

Surface finish:

Degreasing,phosphoric,silane,powder coated;

Optional:

Fixed shelf,fan unit,pdu,cable management, keyboard tray,blank panel;

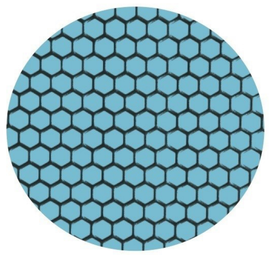

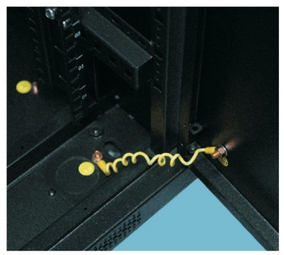

A4 Network Cabinet

Standard:

Comply with ANS/EIA、 RS-310-D、 IEC297-2、 DIN41491、PART1、DIN41494、PART7、GB/T3047.2-92 ETSI standard;

Feature:

★ Toughened glass front door with bar vented hole and arc-shaped door border with spring lock ,three setion vented plate rear door with round lock;

★ 19"standard installation, achieve the international standard for the installation of the versatility of the parts, door interchangeability;

★ Assembled frame structure, assembled and disassembled shippment,Maximize save shipping costs;

★Removable side panels,easy to install and maintain;

★ Various optional accessories, convenient and fast installation,efficient cabinet baying kit;

★Adjustable feet and heavy duty castors are available at the same time,convenient to move or fix;

★ Several lockable cable entry on top cover and bottom panel.Front rear door and side panel easy to install and remove ,Bottom ventilation and rat proof;

Loading capacity:

Static loading:800KG ;

Degree of protection:

IP20;

Surface finish:

Degreasing,phosphoric,silane,powder coated ;

Optional:

Fixed shelf,fan unit,pdu,cable management, keyboard tray,blank panel;

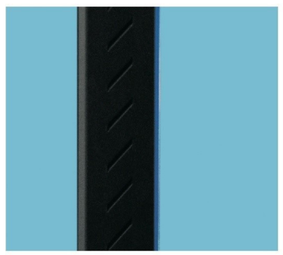

ことひら システム
Kotohira System

AS Network Cabinet

Standard:

Comply with ANS/EIA、 RS-310-D、 IEC297-2、 DIN41491、PART1、DIN41494、PART7、GB/T3047.2-92 ETSI standard;

Feature:

★ Toughened glass front door with small round vented hole and arc-shaped door border with spring lock ,three setion vented plate rear door with round lock;

★ 19"standard installation, achieve the international standard for the installation of the versatility of the parts, door interchangeability;

★ Assembled frame structure, assembled and disassembled shippment,Maximize save shipping costs;

★Removable side panels,easy to install and maintain;

★ Various optional accessories, convenient and fast installation,efficient cabinet baying kit;

★Adjustable feet and heavy duty castors are available at the same time,convenient to move or fix;

★Vetilation rate is 70%,can meet the requirements of heat dissipation;

★Several lockable cable entry on top cover and bottom panel.Front rear door and side panel easy to install and remove ,Bottom ventilation and rat proof.

Loading capacity:

Static loading:800KG ;

Degree of protection:

IP20;

Surface finish:

Degreasing,phosphoric,silane,powder coated;

Optional:

Fixed shelf,fan unit,pdu,cable management, keyboard tray,blank panel;

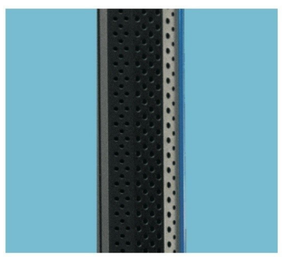

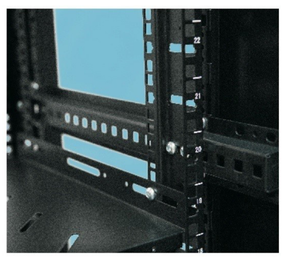

AD Network Cabinet

Standard:

Comply with ANS/EIA、 RS-310-D、 IEC297-2、 DIN41491、PART1、DIN41494、PART7、GB/T3047.2-92 ETSI standard;

Feature:

★ Arc hexagonal reticular high-density vented front door,Hexagonal reticular high-density vented plate rear door,front and back door with spring lock;

★ Elegant design,exquisite workmanship,precise dimensions;

★ 19"standard installation, achieve the international standard for the installation of the versatility of the parts, door interchangeability;

★ Assembled frame structure, assembled and disassembled shippment,Maximize save shipping costs;

★Removable side panels,easy to install and maintain;

★ Various optional accessories,convenient and fast installation,efficient cabinet baying kit;

★Adjustable feet and heavy duty castors are available at the same time,convenient to move or fix;

★Vetilation rate is 71%,can meet the requirements of heat dissipation;

★Several lockable cable entry on top cover and bottom panel.Front rear door and side panel easy to install and remove ,Bottom ventilation and rat proof.

Loading capacity:

Static loading:800KG ;

Degree of protection:

IP20;

Surface finish:

Degreasing,phosphoric,silane,powder coated ;

Optional:

Fixed shelf,fan unit,pdu,cable management, keyboard tray,blank panel;